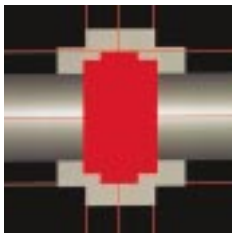

CORDIFLEX

* * * Torsional flexibility	* * Radial flexibility	Push fit Axial flexibility	* * Conical flexibility

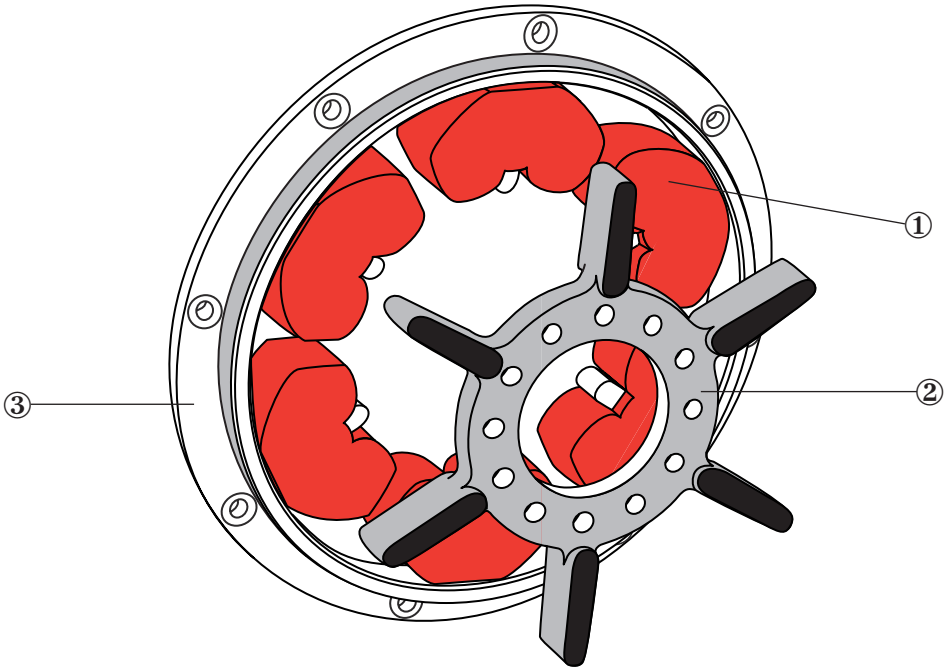

DESCRIPTION

- Flexible element :
  ① 6 fairly hard natural rubber shaped support blocks, on the inside edge of the outer ring of the coupling.
- Flange :
  ② inside flange has 6 arms which fit axially between the blocks by “blind axial” assembly.
- Outer ring :
  ③ Ring with teeth that hold the blocks.

Standard SAE fixing and centring.

OPERATION

The CORDIFLEX coupling is designed to have the following features :

- Simplicity of design and assembly of the flexible elements making it easy to vary the torsional stiffness simply by replacing the blocks.

Advantages :

- SAE centring.
- The coupling is very slim.

DIMENSIONS

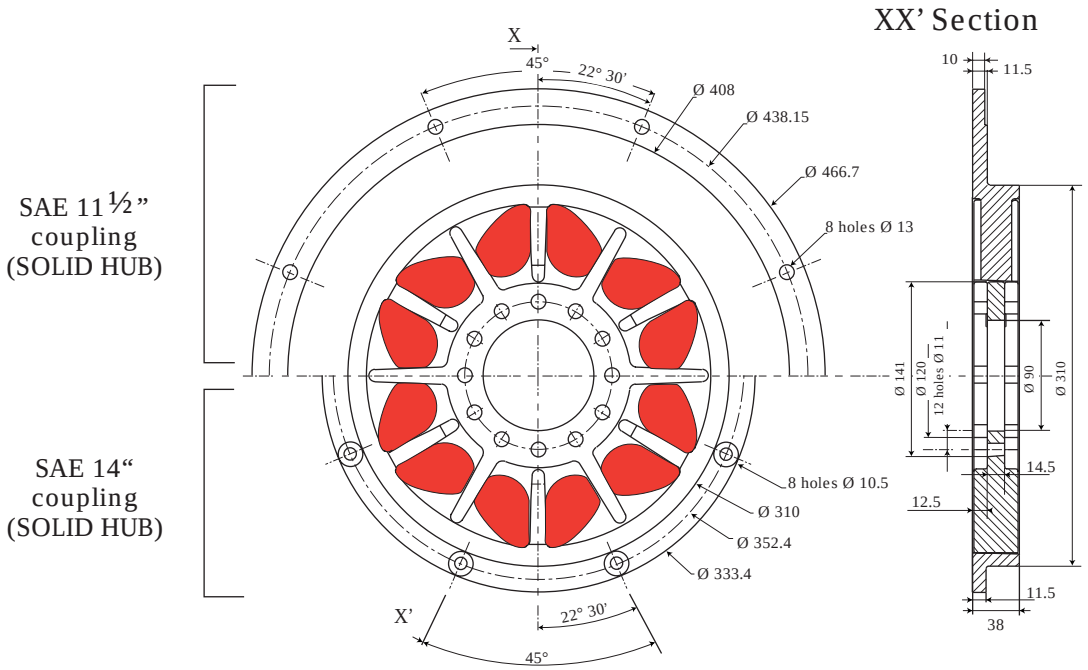

Nominal torque N.m	Max torque N.m	Max speed rpm	Max hole mm	Reference			
				14"	Wght kg	11" ½	Wght kg
600	1200	3000	75	639012 40	23	639063 40	18
800	1600	3000	75	639012 41	23	639063 41	18
1000	2000	3000	75	639012 42	23	639063 42	18
1200	2400	3000	75	639012 43	23	639063 43	18

The maximum torque is considered to be an infrequent start-up torque and is not periodic.

OPERATING CHARACTERISTICS

Nominal torque N.m	Vibratory coupling N.m	STIFFNESS		
		AXIAL	RADIAL daN/mm	TORSIONAL N.m/rad.
600	300	PUSH FIT	30	675
800	400		45	800
1000	500		60	1150
1200	600		75	1430

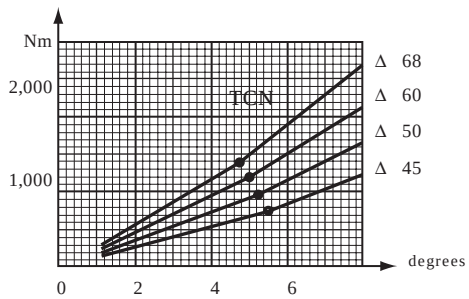

1 Nm ≠ 0.1 mkg - Tangente δ = 0.1

NOTE : The technical data is identical for 14" and 11½" couplings for the same nominal torque.

PARTS LIST

14" Coupling

Coupling reference	Flexible element reference	Qty	Flange reference	Qty	Disk reference	Qty
639012 40	819823 40	6	321400	1	322200	1
639012 41	819823 41	6	321400	1	322200	1
639012 42	819823 42	6	321400	1	322200	1
639012 43	819823 43	6	321400	1	322200	1

11" ½ Coupling

Coupling reference	Flexible element reference	Qty	Flange reference	Qty	Disk reference	Qty
639063 40	819823 40	6	321400	1	322201	1
639063 41	819823 41	6	321400	1	322201	1
639063 42	819823 42	6	321400	1	322201	1
639063 43	819823 43	6	321400	1	322201	1